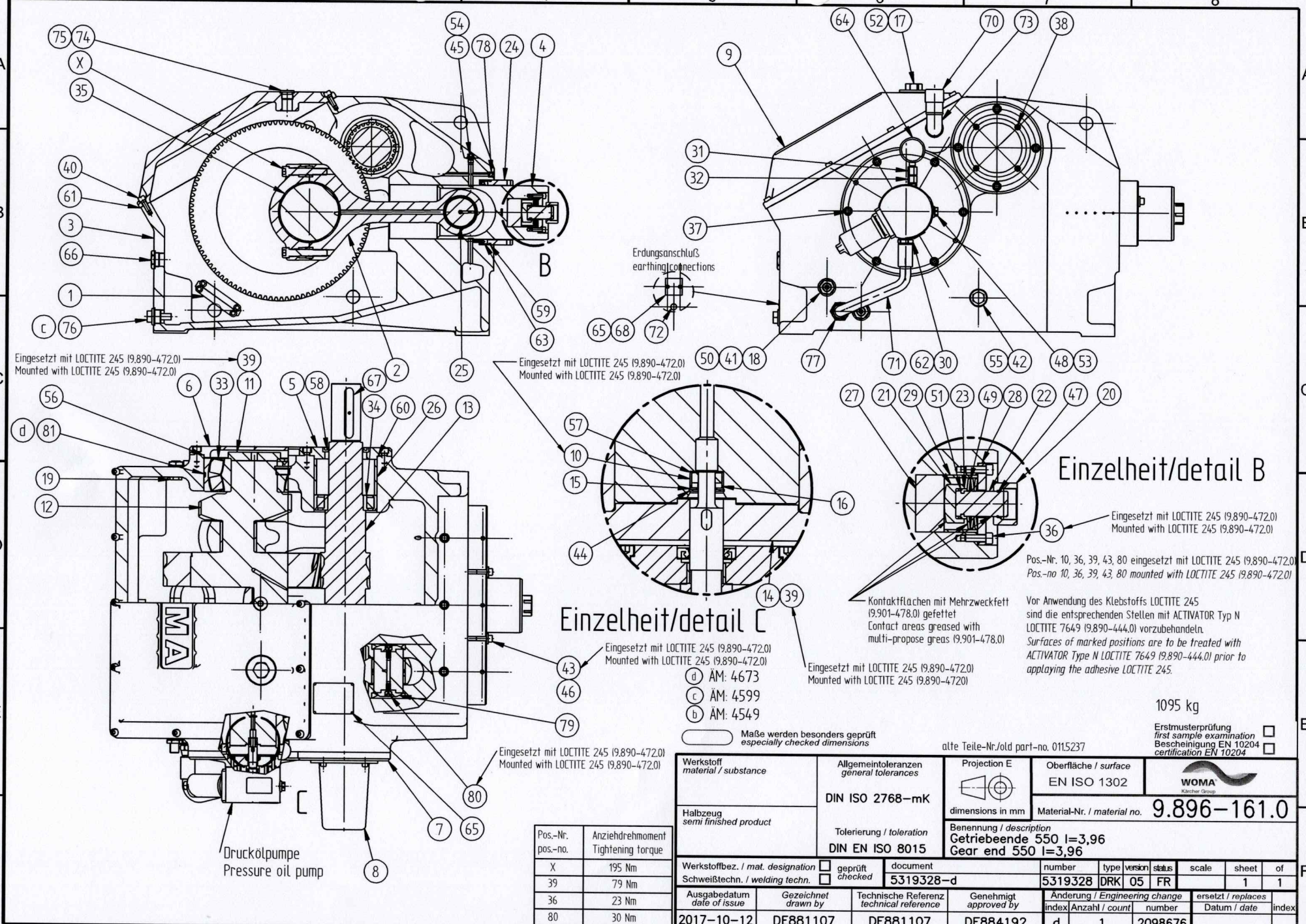

Pos.-Nr. pos.-no.	Anziehdrehmoment Tightening torque
X	195 Nm
39	79 Nm
36	23 Nm
80	30 Nm

Werkstoff *material / substance*	Allgemeintoleranzen *general tolerances* DIN ISO 2768-mK	Projection E dimensions in mm	Oberfläche / *surface* EN ISO 1302	WOMA Kärcher Group					
Halbzeug *semi finished product*	Tolerierung / *toleration* DIN EN ISO 8015		Material-Nr. / *material no.* 9.896-161.0						
			Benennung / *description* Getriebeende 550 l=3,96 Gear end 550 l=3,96						
Werkstoffbez. / *mat. designation* ☐ geprüft *checked* Schweißtechn. / *welding techn.* ☐	document 5319328-d	number 5319328	type DRK	version 05	status FR	scale	sheet 1	of 1	
Ausgabedatum *date of issue* 2017-10-12	Gezeichnet *drawn by* DE881107	Technische Referenz *technical reference* DE881107	Genehmigt *approved by* DE884192	Änderung / *Engineering change* index d	Anzahl / *count* 1	number 2098676	ersetzt / *replaces* Datum / *date*	index	

A3

The reproduction, distribution and utilization of this document as well as the communication of its contents to others without explicit authorization is prohibited. Offenders will be held liable for the payment of damages.
All rights reserved in the event of the grant of a patent, utility model or design. Copyright © WOMA GmbH. Schutzvermerk ISO 16016 beachten.

2019-07-02 11:30:12 0.707